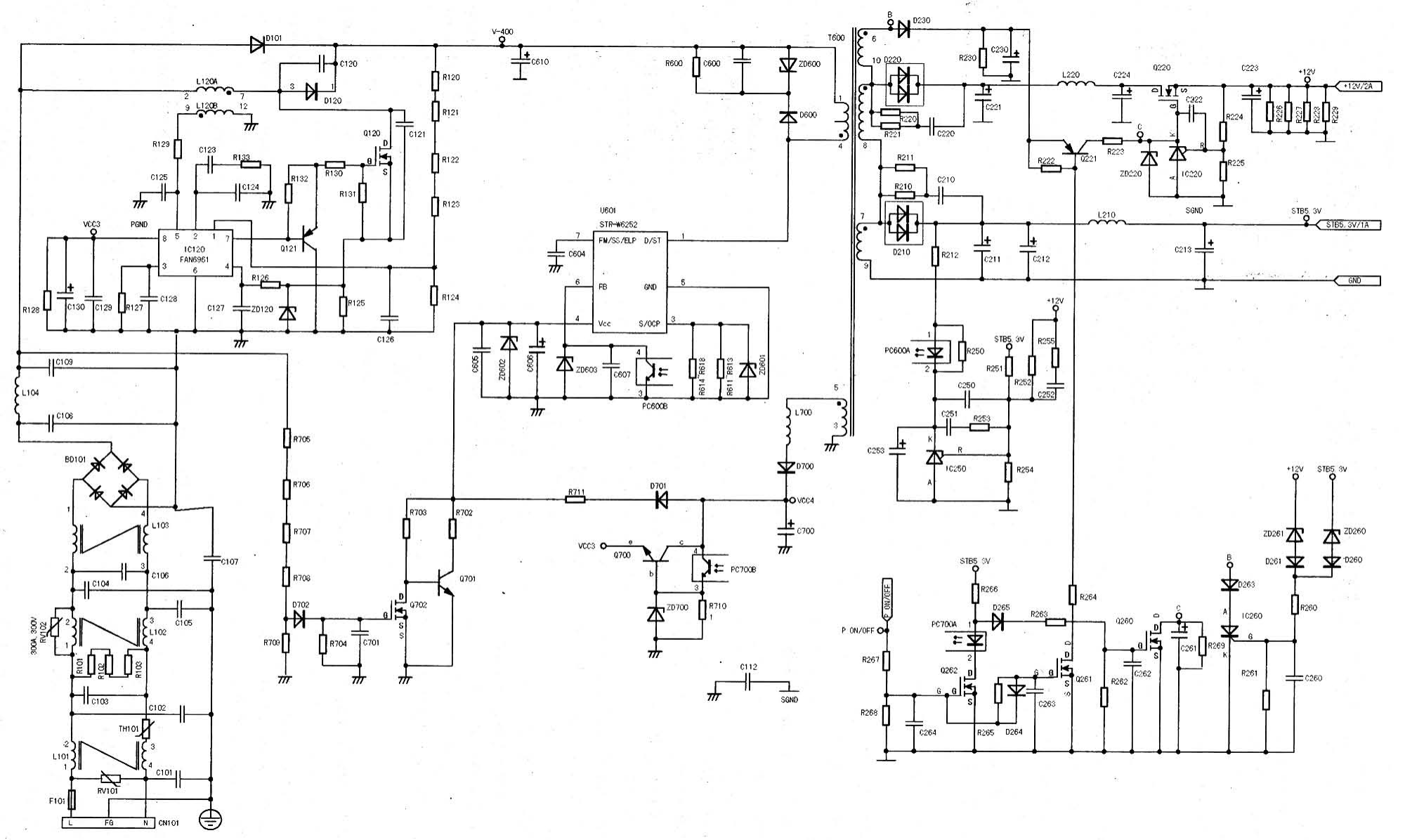

D101
V-400
C610
R600
C600
ZD600
D600
T600
D230
C120
D120
L120A
L120B
R120
R121
R122
R123
R124
R129
C123
R133
C125
C124
R132
R130
R131
Q120
Q121
C121
VCC3
PGND
IC120
FAN6961
R126
R125
C127
ZD120
C126
R128
C130
C129
R127
C128
U601
STR-W6252
FM/SS/ELP
D/ST
FB
GND
Vcc
S/OCP
C604
C605
ZD602
C606
ZD603
C607
PC600B
R614
R618
R611
R613
ZD601
L104
C109
C108
BD101
L103
C106
C104
C107
C105
300A, 300V
RV102
L102
R101
R102
R103
C103
C102
TH101
L101
C101
RV101
F101
CN101
R705
R706
R707
R708
D702
R709
R704
C701
R703
R702
Q702
Q701
R711
D701
VCC3
Q700
PC700B
ZD700
R710
L700
D700
VCC4
C700
C112
SGND
D220
R230
C230
R220
R221
C220
C221
L220
C224
Q220
C223
+12V
+12V/2A
C222
R224
R226
R227
R228
R229
R222
Q221
R223
ZD220
IC220
R225
R211
R210
C210
D210
R212
C211
C212
L210
STB5.3V
STB5.3V/1A
C213
GND
PC600A
R250
R251
R252
R255
C250
C251
R253
C252
C253
IC250
R254
R266
D265
R263
R264
PC700A
Q262
Q261
Q260
C262
C261
R269
D263
IC260
R260
R261
C260
R267
R268
C264
R265
D264
C263
R262
P ON/OFF
ZD261
ZD260
D261
D260

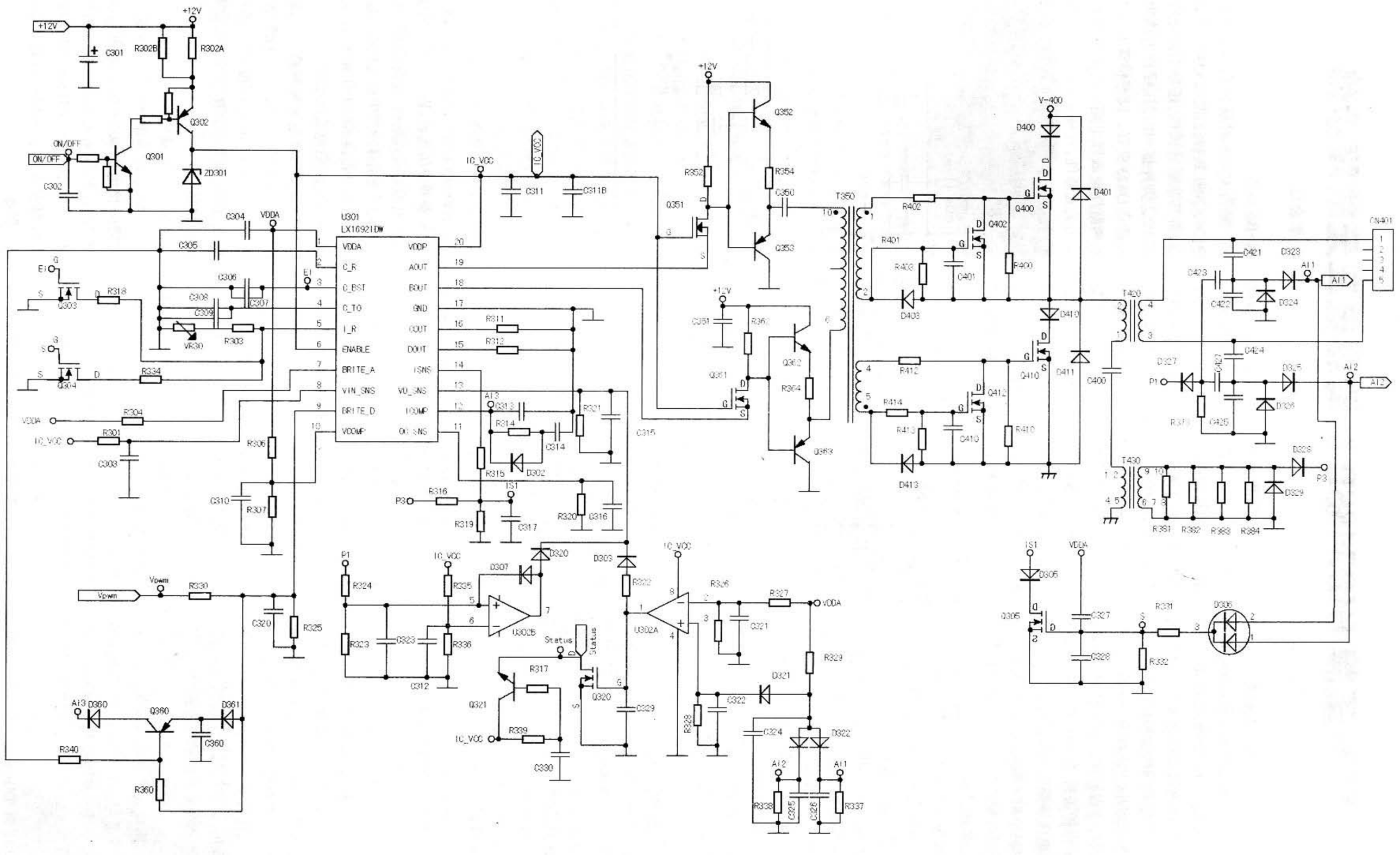

+12V
C301
R302B
R302A
Q302
ON/OFF
Q301
ZD301
C302
IC_VCC
C311
C311B
C304
VDDA
U301
LX1692IDW
VDDA
C_R
C_BST
C_TO
I_R
ENABLE
BRITE_A
VIN_SNS
BRITE_D
VCOMP
VDDP
AOUT
BOUT
GND
COUT
DOUT
ISNS
VO_SNS
ICOMP
OC_SNS
C305
C306
C307
C308
C309
VR30
R303
R318
Q303
Q304
R334
R304
R301
C303
R306
C310
R307
R311
R312
A13
C313
R314
C314
R315
D302
R321
C315
P3
R316
R319
C317
IS1
R320
C316
Vpwm
R330
C320
R325
P1
R324
R323
C323
R335
R336
C312
D307
D320
U302B
D303
R322
U302A
Status
R317
Q321
R339
C330
Q320
C329
R326
R327
VDDA
C321
R329
D321
C322
R328
C324
D322
A12
A11
R338
C325
C326
R337
A13
D360
Q360
D361
C360
R340
R360
Q352
R352
R354
C350
Q351
Q353
C351
R362
Q361
Q362
R364
Q363
T350
R402
R401
R403
C401
D403
Q402
R400
Q400
D400
D401
V-400
D410
D411
R412
R414
R413
C410
D413
Q412
R410
Q410
C400
T420
C421
C423
C422
D323
D324
A11
CN401
C424
C427
D327
D325
D326
P1
R373
C425
A12
T430
D328
D329
P3
R381
R382
R383
R384
IS1
D305
VDDA
C327
C328
R331
R332
D306